TECHNICAL DATASHEET

Sanitar

Single Lever Kitchen Mixer

Ref. : DELI - KM
SAN DELI 1113 3692

Product Description

Single Lever Kitchen Mixer

Item No. DELI - KM
SAN DELI 1113 3692

35mm, Single Lever Mixer, Chrome

Brass Body, Zinc Handle

SS Cartridge Nut

Plastic Areator

1/2* 60cm Flexible Hose with Fixing tube system

Installation Fittings (Stainless steel + Plastic + Rubber)

NO Pop - up

Dimensional Drawing

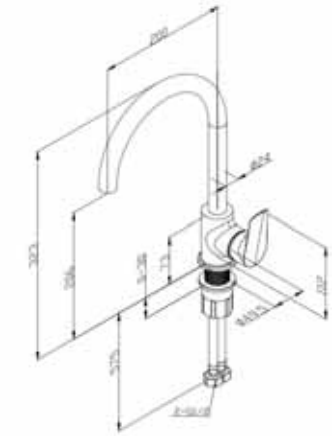

Flow rate diagram

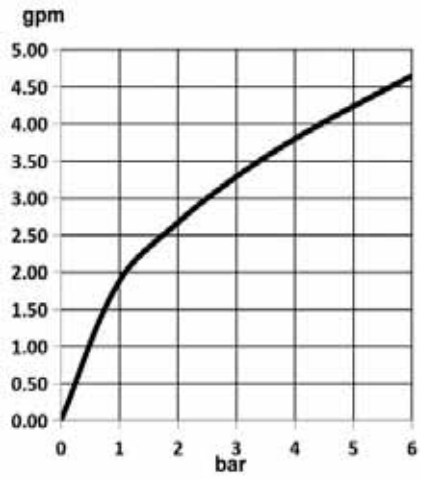

Made in PRC, +/- 5% Tolerance should be expected.
Images/diagrams are representations only. Slight variation can be expected