TECHNICAL DATASHEET

Sanitar

Dual Shower Set

Ref. : MODOV
MOND 2P42 75X

Product Description

Dual Shower Set

Sanitar Item No. MODOV
MOND 2P42 75X

Brass body

Color: CGD

Dimensional Drawing

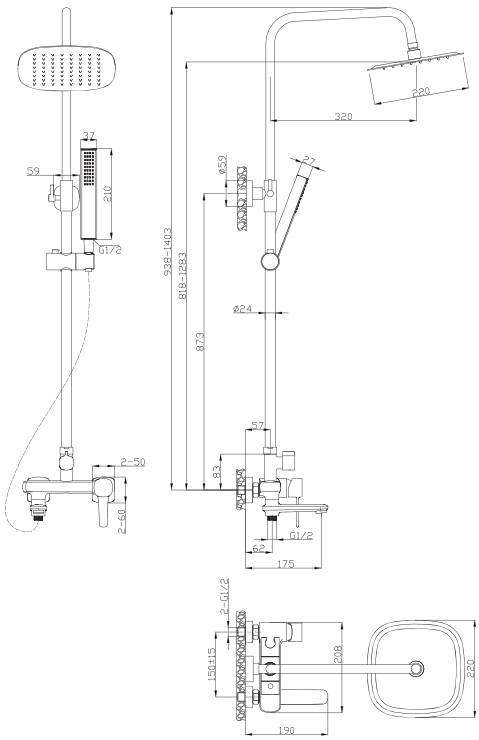

Made in PRC, +/- 5% Tolerance should be expected.
Images/diagrams are representations only. Slight variation can be expected